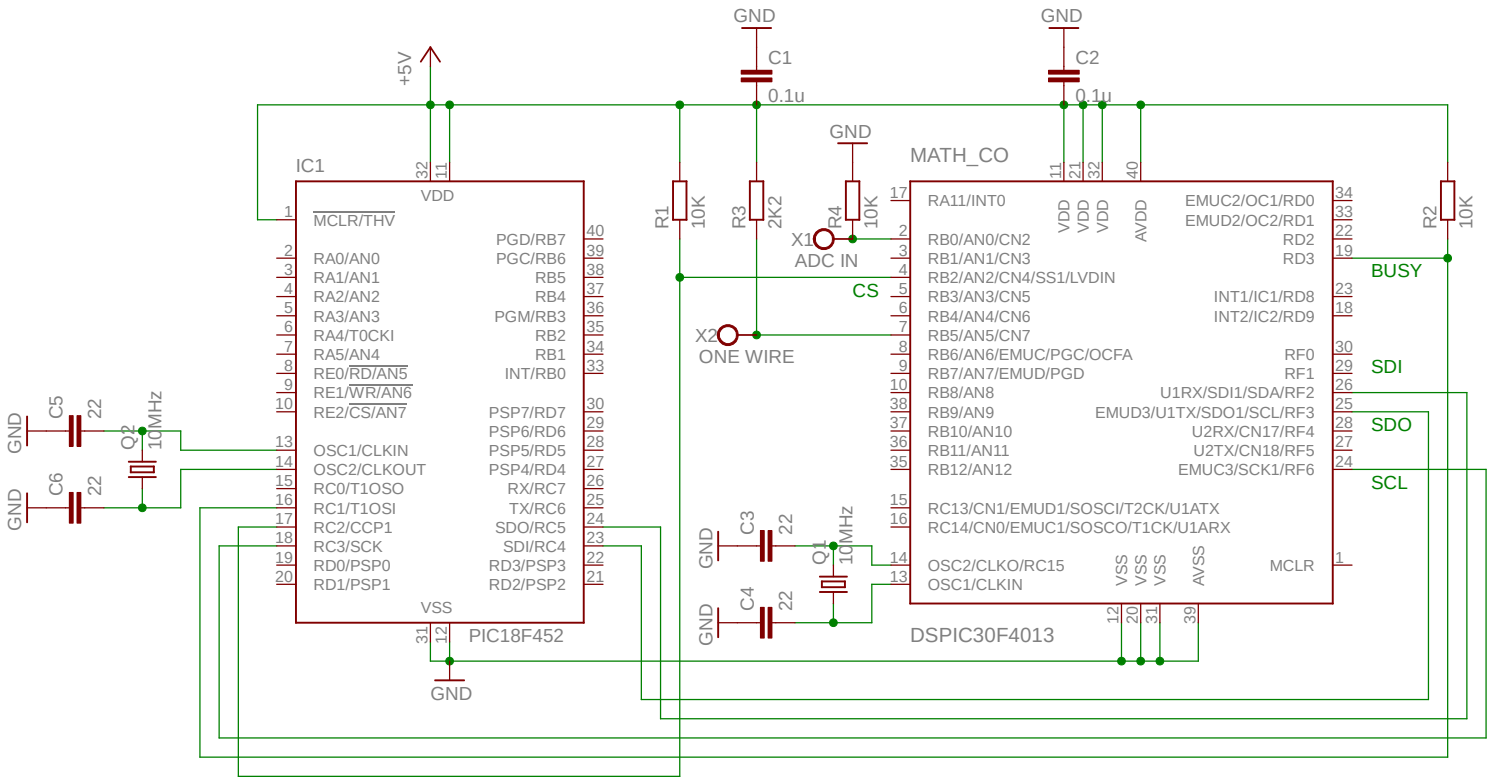

DSPIC MATH COPROCESSOR CONNECTIONS DIAGRAM