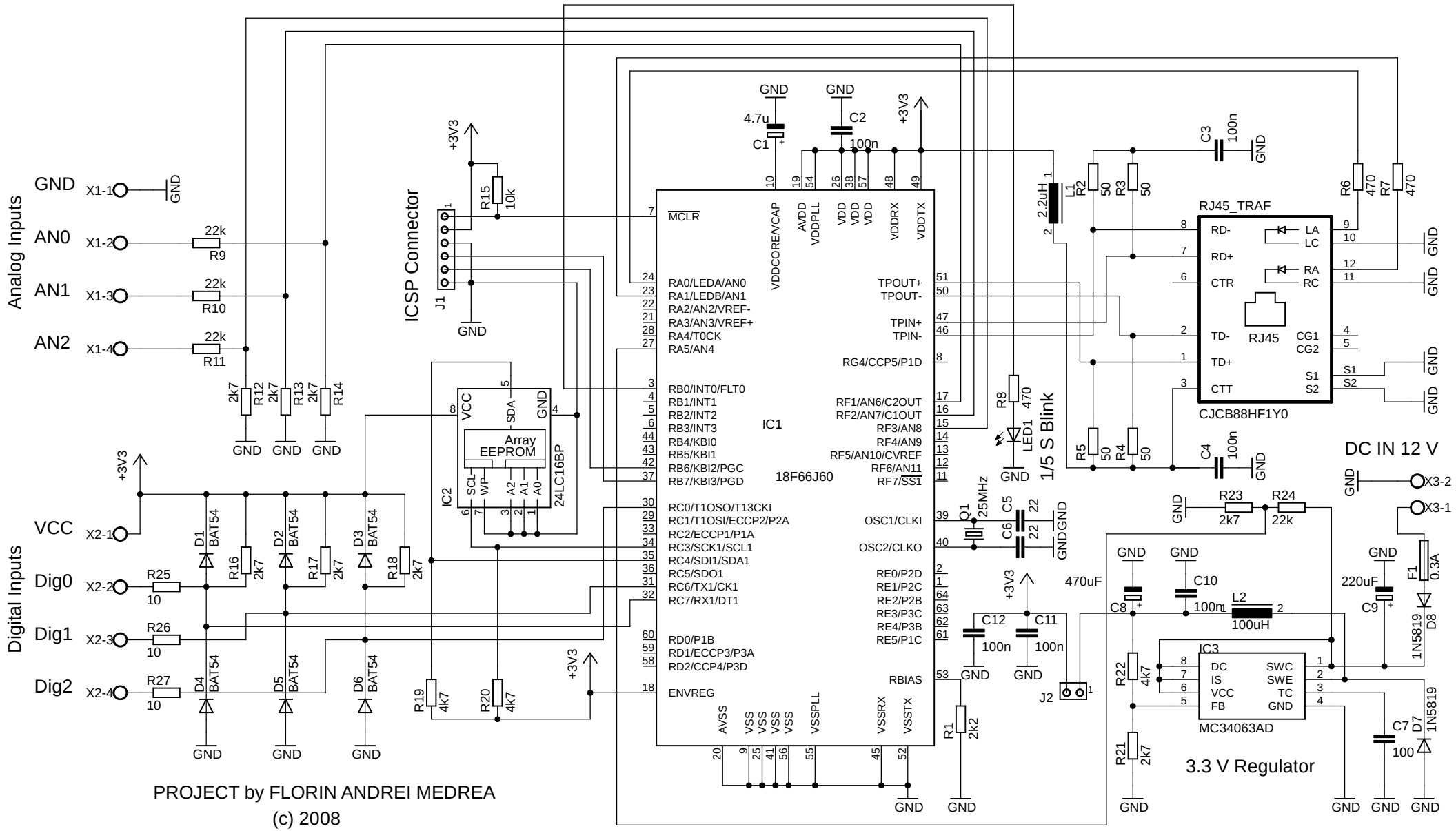

PROJECT by FLORIN ANDREI MEDREA
(c) 2008